TYPE: DAS0410

DIN Absperrschieber DN50 – DN600 PN40

DIN Gate Valve DN50 – DN600 PN40

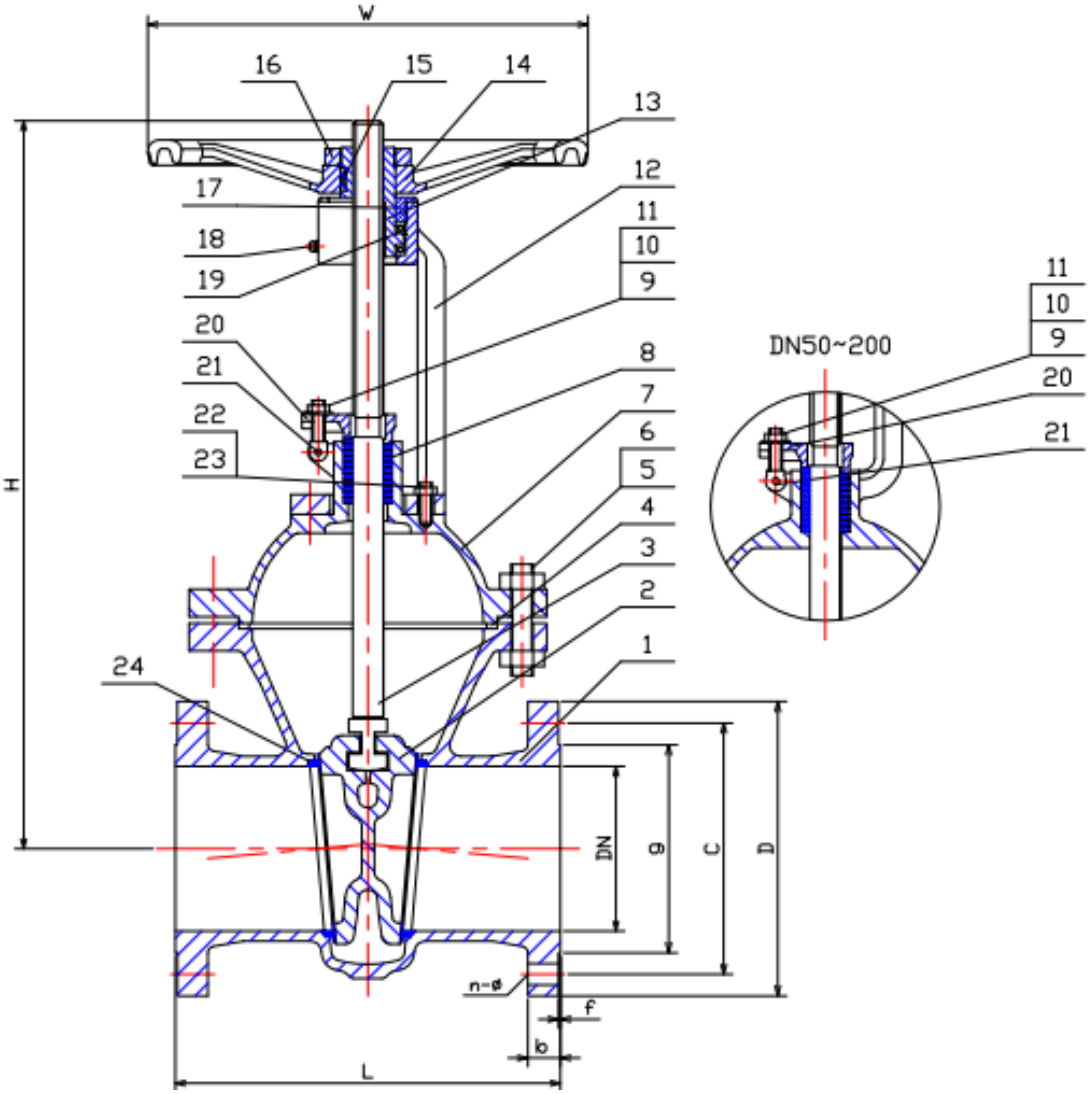

Technical Specification:

1. Design and machining acc. with EN1984
2. Inspection and test acc. EN12266-1
3. Face to Face acc. DIN3202-F7
4. BW end in accordance with EN 1092

DRW Industrietechnik GmbH
Bodelschwingher Str. 125
D-44357 Dortmund
Telefon: +49 2 31 - 92 71 44-0
info@drw-armaturen.de
www.drw-armaturen.de

Abmessungen / Dimensions:

DN	L	g	C	D	b	n-ø	f	W	H
50	250	102	125	165	20	4-18	3	200	325
65	290	122	145	185	22	8-18	3	225	365
80	310	138	160	200	24	8-18	3	225	405
100	350	162	190	235	24	8-22	3	250	475
125	400	188	220	270	26	8-26	3	360	560
150	450	218	250	300	28	8-26	3	400	645
200	550	285	320	375	34	12-30	3	400	800
250	650	345	385	450	38	12-33	3	450	945
300	750	410	450	515	42	16-33	4	500	1130
350	850	465	510	580	46	16-36	4	600	1300
400	950	535	585	660	50	16-39	4	700	1450
500	1150	615	670	755	52	20-42	4	900	1845
600	1350	735	795	890	60	20-48	5	1000	2180

Materialien / Materials:

No.	Part Name	Material
1	Body	1.4308
2	Wedge Disc	1.4308
3	Stem	1.4301
4	Gasket	Spiral Wound Gasket 1.4301 + Graphite
5	Studbolt	A4
6	Nut	A4
7	Bonnet	1.4308
8	Gland Packing	Graphite
9	Studblot	A4
10	Nut	A4
11	Washer	1.4301
12	Yoke	1.4308
13	Yoke Sleeve	GGG - 40
14	Hand Wheel	GGG - 40
15	Key	1.4006
16	Lock Nut	1.4006
17	Bonnet Nut	1.4006
18	Grease Nipple	1.0402
19	Roll Axletree	Axletree Steel
20	Gland Foring	1.4408
21	Pin	1.4006
22	Studbolt	A4
23	Nut	A4
24	Seat Ring	1.4301 + Stellite

DRW Industrietechnik GmbH
Bodelschwingher Str. 125
D-44357 Dortmund
Telefon: +49 2 31 - 92 71 44-0
info@drw-armaturen.de
www.drw-armaturen.de